0728706

SWITCH MODE-INQUIRY MACH ONLY

1401INQ 37.30.11.2

TAG DATE

B 2.7.62
TA 1370A

C 16.4.63
TA 1815A

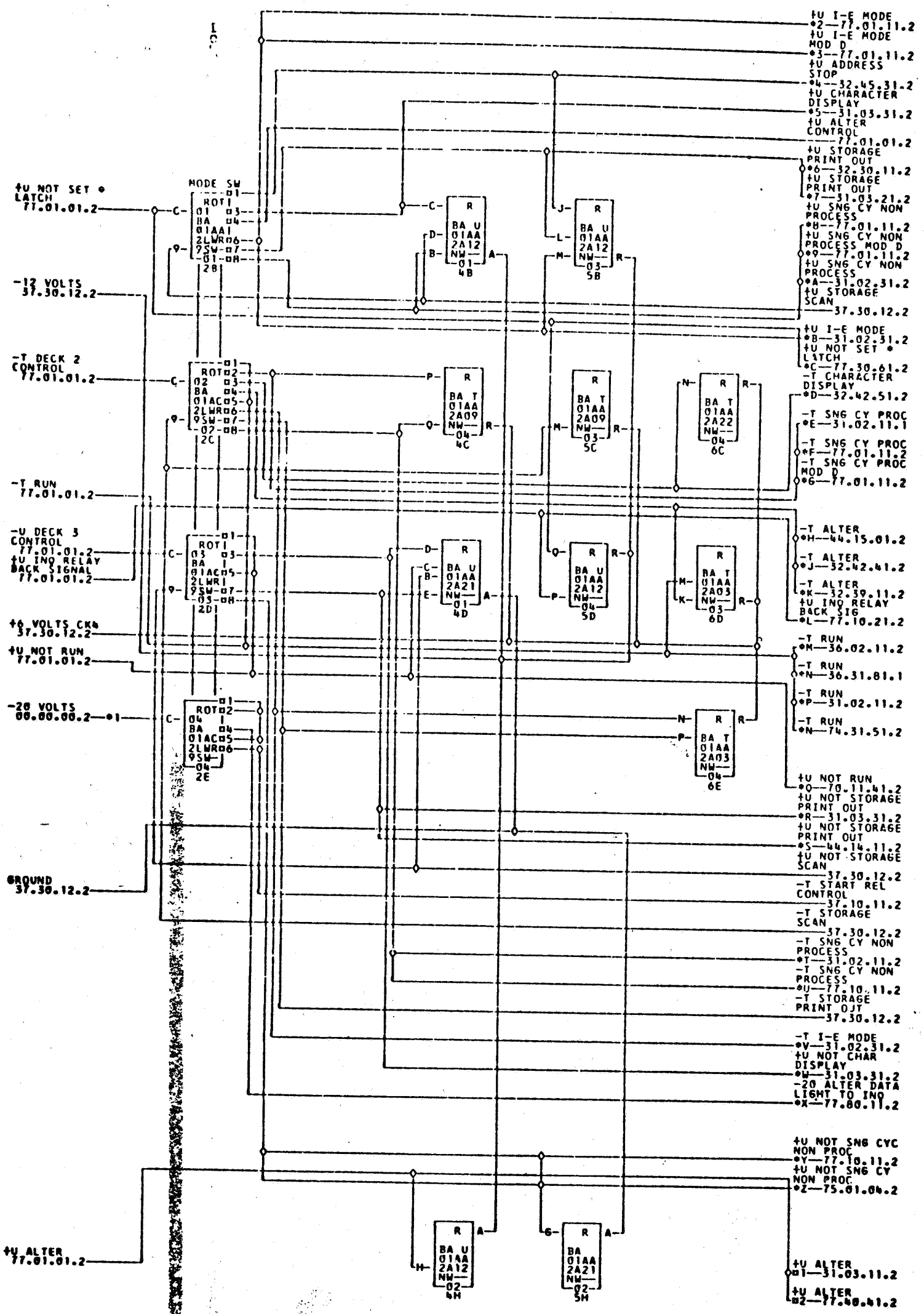

*1—01A2A24P
01A8C26H
01B2F04M
01B2F03B
01A8C26F
01B7D03N
*J—01A2A07D
*M—01A2A19R
02B1E02F
02A0C09E
02A9F03A
01B8A00X
*Y—01A2A23F
01A8C24R

*2—01A2A15R
*5—01A2A11C
*8—01A2A11B
*B—01A2A15R
*E—01A2A13G
*H—01A2A14L
01A8C26D
01B4A03R
*P—01A2A13E
02A2B24K
02B7D02H
*V—01A2A13F
01B8A00N
02A9C11F

02A8C24Q
01B2F03C
02A8C24P
01B2C04R
01B2F04G
02A9F04A
*K—01A2A10G
*N—01A2A07D
01B2F04E
01B2F03K
01B2F03Q
01B2F04F
*Z—01A2A10N
02A8C23R

*3—01A2A15R
*6—01A2A10B
*9—01A2A11B
*C—01A2A23C
*F—01A2A13G
02B7D02L
01A7E25G
01A6D26D
*Q—01A2A18K
*R—01A2A11K
*T—01A2A13H
*W—01A2A11Q
01A7E25N
¤1—01A2A11A

01B7D03Q
01A7E25B
01B7D03P
01B8A00C
02A8C24N
02B7C02K
*L—01A2A23K
01A6F23K
01B3F02K
01B2F03K
*X—01A2A23G
01B2F04H
01A7A23G
¤2—01A2A23A

*4—01A2A02H
*7—01A2A13M
*A—01A2A11B
*D—01A2A02F
*G—01A2A13G
02A7A26K
01B8A0AH
02A9A15F
01B3F03K
*S—01A2A14H
*U—01A2A23E
01B8A0BK
01A8A26G
01B8A00D

728706

COMMENTS
THIS DIAGRAM APPLIES ONLY TO MACHINES WITH INQUIRY

TAG	DATE	E.C.NO.	TAG	DATE	E.C.NO.	TAG	DATE	E.C.NO.	TAG	DATE	E.C.NO.
A	12-15-61	113530	B	04-04-62	114133	C	01-22-63	114177A			