0724634 STOP SS TRIGGER 1401 BA 36.48.11.2

TAG DATE
C 26.9.62
TA 1344D
D 16.4.63
TA 1815A

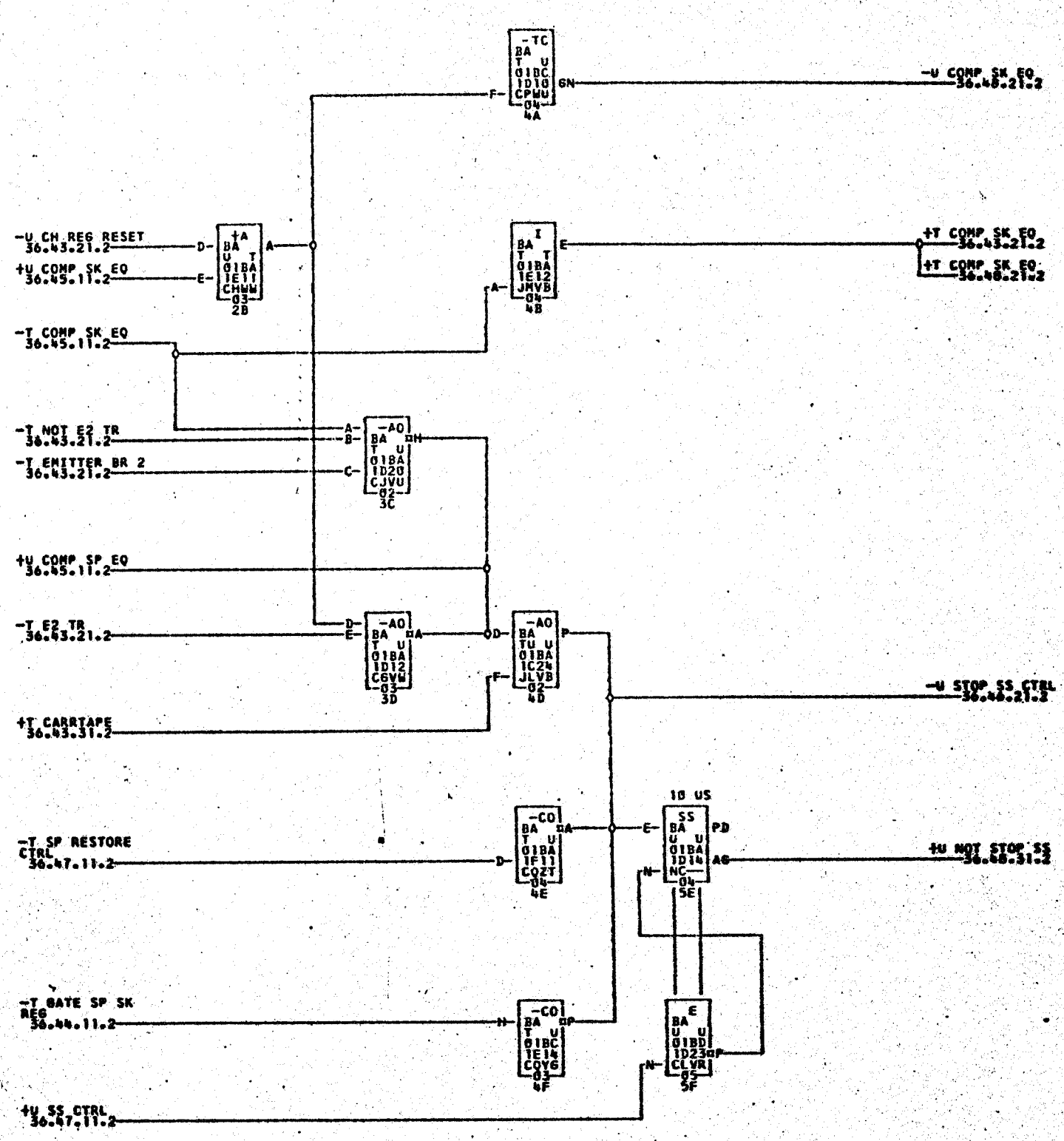

COMMENTS

TAG	DATE	E.C.NO.	TAG	DATE	E.C.NO.	TAG	DATE	E.C.NO.	TAG	DATE	E.C.NO.
A	12-04-61	112269C	B	02-22-62	114126A	C	06-05-62	114132A	D	01-14-63	116789

724634