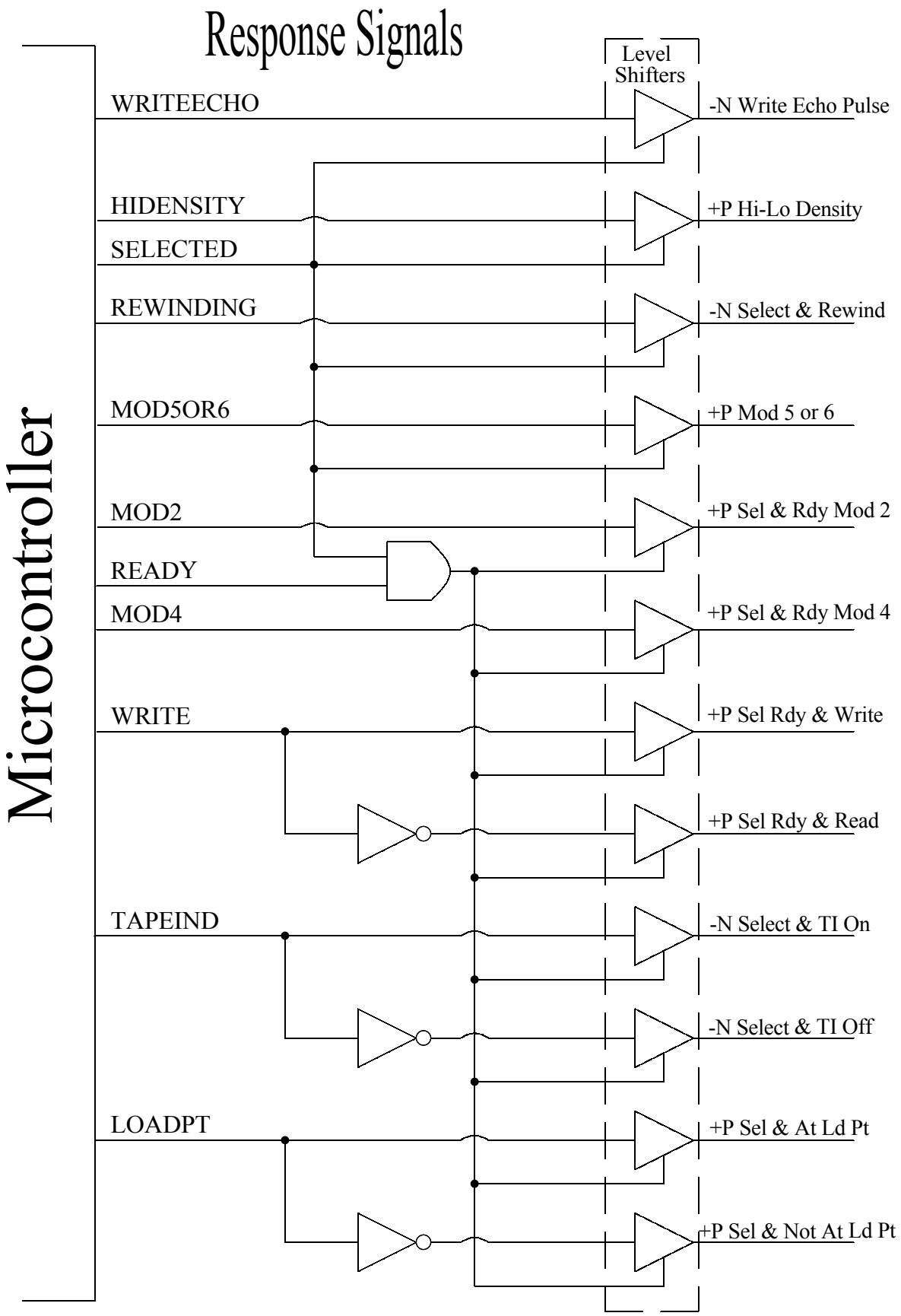
Response Signals
Microcontroller
Level Shifters
WRITEECHO
HIDENSITY
SELECTED
REWINDING
MOD5OR6
MOD2
READY
MOD4
WRITE
TAPEIND
LOADPT
-N Write Echo Pulse
+P Hi-Lo Density
-N Select & Rewind
+P Mod 5 or 6
+P Sel & Rdy Mod 2
+P Sel & Rdy Mod 4
+P Sel Rdy & Write
+P Sel Rdy & Read
-N Select & TI On
-N Select & TI Off
+P Sel & At Ld Pt
+P Sel & Not At Ld Pt