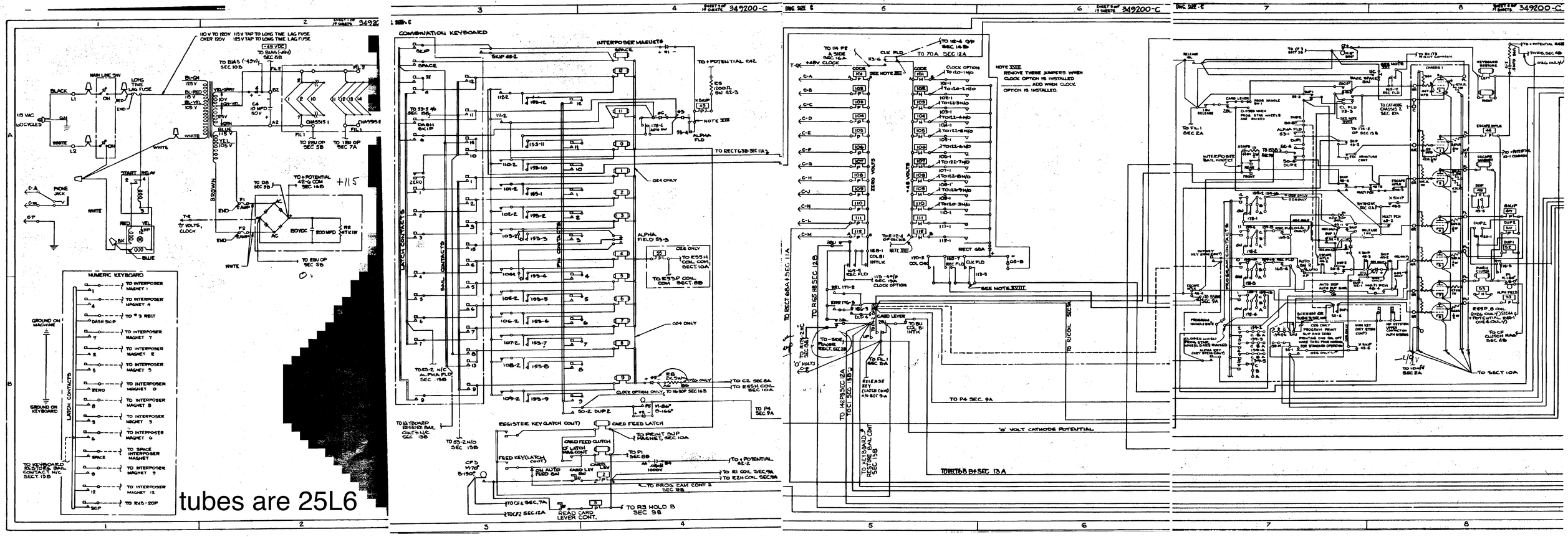
349200-C
COMBINATION KEYBOARD
NUMERIC KEYBOARD
LATCH CONTACTS
BAIL CONTACTS
INTERPOSER MAGNETS
CARD FEED LATCH
CARD FEED CLUTCH
READ CARD LEVER CONT.
ALPHA FIELD 53-3
TO RECT 6B+ SEC 13A
'0' VOLT CATHODE POTENTIAL
NOTE XVIII
REMOVE THESE JUMPERS WHEN CLOCK OPTION IS INSTALLED
ADD WHEN CLOCK OPTION IS INSTALLED.
tubes are 25L6