QUINARY ADDER-Q8 Q2 Q4 Q6 CARRY

1461 BA 34.32.15.2

TAG DATE

A 5.4.62
TA 1233 B

B 5.3.63
TA 1771A

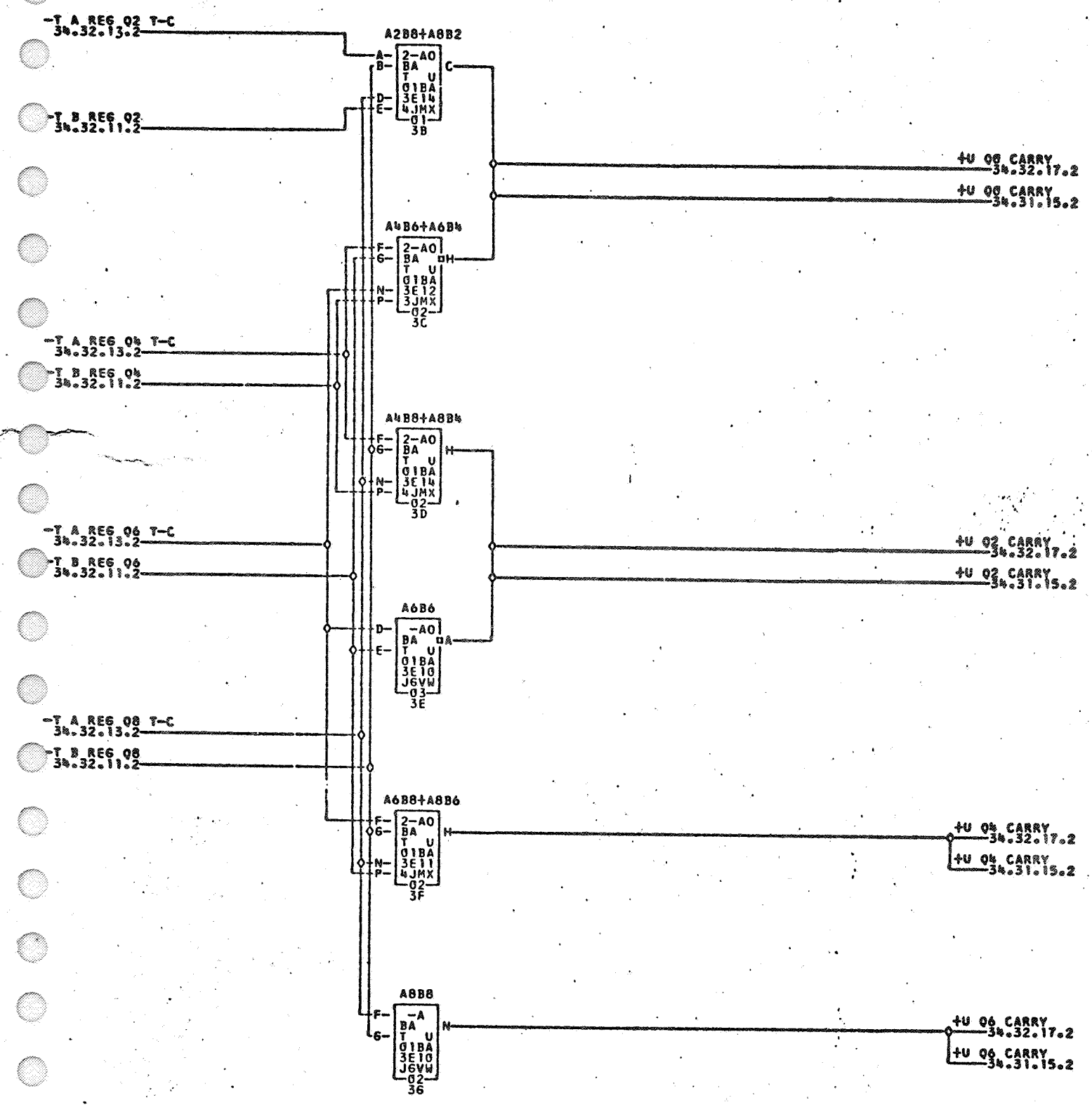

COMMENTS

TAG	DATE	E.C.NO.	TAG	DATE	E.C.NO.	TAG	DATE	E.C.NO.	TAG	DATE	E.C.NO.
A	12-18-61	113530	B	12-10-62	114178						

729117