0729087 CLOCK CONTROL SECTION 1 1401 BA 31.10.11.2

TAG DATE
G 7.2.33
TA 1713A
H 5.3.63
TA 1771A

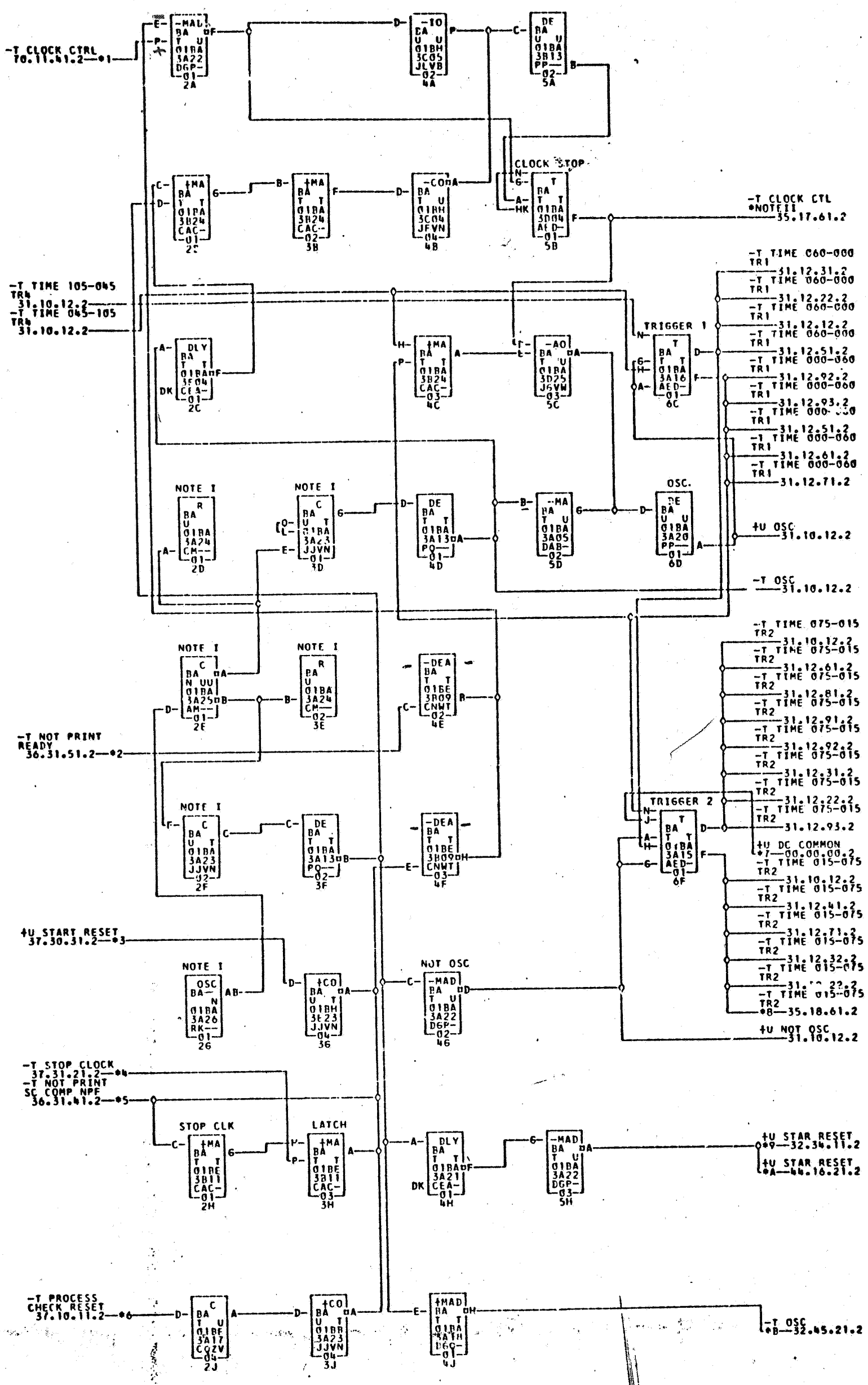

COMMENTS
NOTE I A23Q,A24Q,A25Q,AND A26Q ARE WIRED TO +6 INSTEAD OF +6M.
NOTEII EXTERNAL CABLE FOR OVERLAP INDICATOR PANEL

TAG	DATE	E.C.NO.	TAG	DATE	E.C.NO.	TAG	DATE	E.C.NO.	TAG	DATE	E.C.NO.
A	12-18-61	113530	B	02-12-62	114242	C	03-23-62	114130	D	04-04-62	114133
E	05-10-62	114144	F	06-14-62	114148	G	10-23-62	114164	H	12-10-62	114178

729087
1771 A